Roll No. : .....

MID SEMESTER EXAMINATION MARCH 2025

Name of the Program: **B.Tech** Semester: 4

Name of the Course: Finite Automata and Formal Languages

Course Code: TCS-402

Time : 90 Minutes **Maximum Marks : 50**

Note:

i. Answer all the questions by choosing any one of the sub questions
ii. Each questions carries 10 marks

Q1	(10 Marks)	CO1
(a)	Using Partitioning method obtain the minimal and equivalent version of the given below DFA (which consists of minimum number of states possible). 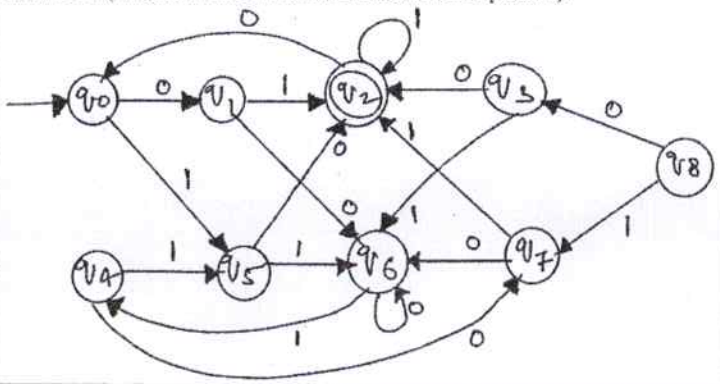	
	OR	
(b)	Using Myhill-Nerode theorem obtain the minimal and equivalent version of the given below DFA (which consists of minimum number of states possible). 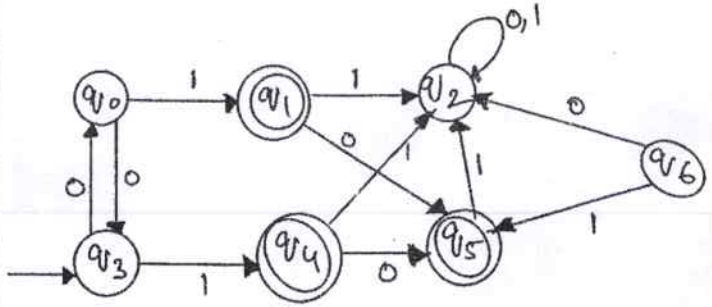	CO3
Q2	(10 Marks)	CO2

(a)	Construct a Moore machine for set of all strings over alphabet set {0,1} and produces 'A' as output if input ends with '10' or produces 'B' as output if input ends with '11' otherwise produces 'C' as output.	
	OR	
(b)	Construct a Mealy machine for the set of all strings over alphabet set {0,1} and produces 2's compliment as its output. For simplicity you can consider the input string is read in reverse order and output will be generated in reverse order only. Example for binary string 11001 2's complement is 00111 but our machine reads input as 10011 and output as 11100.	
Q3	(10 Marks)	CO2
(a)	Write the regular expressions for accepting the following regular languages. i. L1 = {strings which doesn't contains two a's together}, Σ = {a,b} eg. strings like aba, abab etc are acceptable but aa, baa etc are not acceptable. ii. L2 = {strings which doesn't contains neither two a's nor two b's together}, Σ = {a,b} eg. strings like aba, abab etc are acceptable but aa, bb, aab, bbaa are not acceptable.	
	OR	
(b)	Find the regular expression for the following DFA using Arden's theorem. 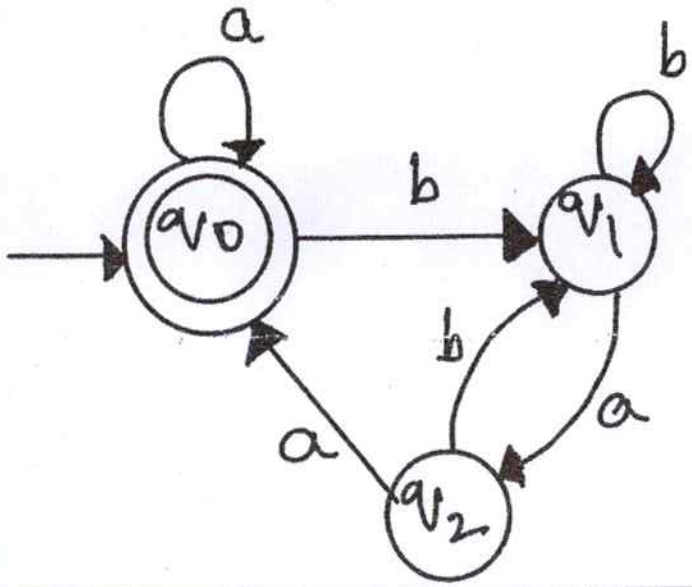	
Q4	(10 Marks)	CO1
(a)	Construct a minimum state DFA for the following: i. Accepting ternary numbers (radix 3) whose decimal equivalent is divisible by 4 leaves remainder as 0. ii. Accepting all strings over {a,b} having even number of a's and odd number of b's.	
	OR	
(b)	State the pumping lemma for regular language and proof that the below language L is Not regular using pumping lemma. $L = \{ww^r \mid w \in \Sigma^* \text{ and } w^r \text{ denotes the reverse of } w\}$, Σ = {a,b}	
Q5	(10 Marks)	CO1

(a)	Convert the given below NFA into its equivalent DFA. 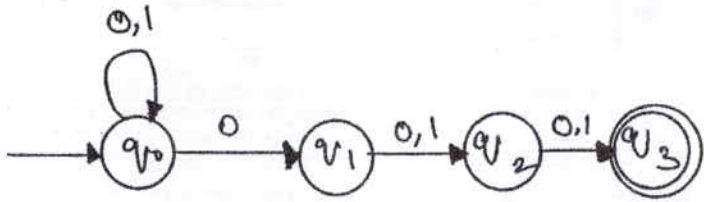 	CO2
	OR	
(b)	Convert the given below ∈-NFA into its equivalent NFA. 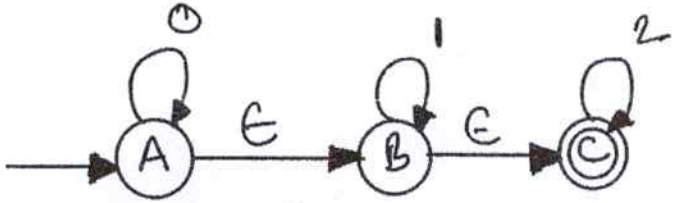 	CO3